Product	GD888 8 Hole coin hopper for game or vending machine
Specification	Input Voltage: DC+24V Work Temperature： -15℃~+75℃
Coin acceptance	Coin diameter: φ20 mm - 27 mm thickness: 1.66 mm - 2.3 mm
Capacity:	It has capacity of 2000 pcs in the hopper.
Dispense Coin speed:	8-12 pcs per second. When got pulse signal , it dispense coins out.
coin hopper Pack	8 pcs/box CMB: 0.092m³/box G.W.:24kg/box Size:47.0*42.0*46.5cm/box
Single Package	Weight:0.4kg/pc Size:23.5*21*25.5cm/pc
Feature	1) Anti-jam design with patented technology 2) Reliable fast payout 3) Two layers rotator built for long operation 4) Wide range coin size, truly global 5) Low position coin exit allows closet installation of the hoppers 6) Reliable optical sensors 7) Support both metal coins and non-metal tokens 8) Automatically restore from the failure under the intelligent control 9) Easy to replace worn parts

Product View

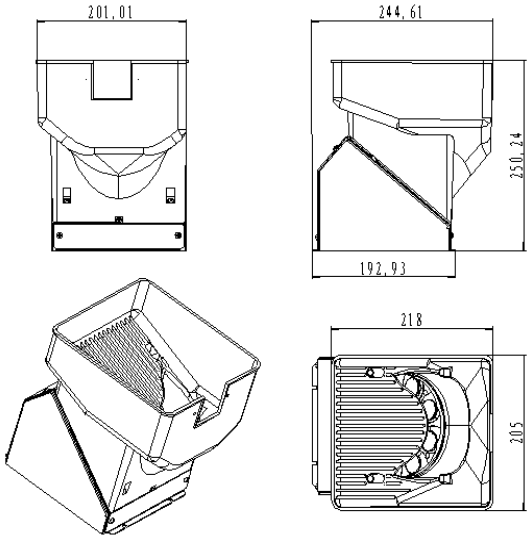

Cable Interface

5 cable wiring diagram

Purple –coin sensor+5V
Blue –coin sensor GND
Brown–Signal of coin sensor
Black–motor GND
Red-motor +24V

8 cable wiring diagram

Orange—coin sensor+5V (NO)	Purple –coin sensor+5V (NC)
Green –coin sensor GND (NO)	Blue –coin sensor GND (NC)
yellow–Signal of coin sensor (NO)	Brown–Signal of coin sensor (NC)
Red-motor +24V	Black–motor GND

History	1996 into market,15 years long history model,Elite model
Application	Vending machine,gaming machine,jukebox,coinbox,cyber café,arcade crane,etc.
Standard	European standard
High speed coin out	600 coins/ minute 75 revolutions per minute (r/m) Max.2000 coins in hopper
OEM	Accepted